EN 14175

– Requirements for Fume Cupboards

DIN 12924 – EN 14175

The contents of the DIN 12924 part 1 standard is divided into 5 parts in the EN 14175 standard:

14175-1 → Terms and Dimensions
14175-2 → Requirements to Safety and Efficiency
14175-3 → Type Test Procedures
14175-4 → On Site Tests
14175-5 → Recommendations for Installation and Maintenance

Parts 1 to 3 have already been published in September 2001 as drafts. No fundamental changes with regard to content are expected during the forthcoming handling of objections and therefore we, as a manufacturer, are able to adapt our fume cupboards to the new requirements already today.

EN 14175 Part 1

Terms and dimensions for fume cupboards of general used are stipulated.

Terms and dimensions are of assistance in designing fume cupboards, in drawing up information for the user and in testing the fume cupboards.

In addition, terms and dimensions are of importance for users and authorities for maintenance of industrial health and safety standards.

The given dimensions do not result in requirements different from DIN 12924. Those requirements which partly derive from new terms are being described in parts 2 and 3 of this standard.

EN 14175 Part 2

The safety requirements stipulated in part 2 of the EN 14175 standard are guidelines for the design of fume cupboards and therefore provide the base for fume cupboard tests.
The safety and the efficiency can be tested in two different procedures:

a) Type test according to the requirements of part 2 and test procedures according to part 3 of the EN 14175 standard
b) On site test according to the requirements of part 2 and test procedures according to part 4 of the EN 14175 standard

The on site test examines individual fume cupboards in their respective environment and is not meant to be a type test. Those results may not be applied to other fume cupboards of the same serial make.

Materials

The transparent sash should be made of materials which provide for an optimal physical protection against unintentional release of substances.
Therefore either tempered safety glass or laminated safety glass, or suitable plastic materials should be used.

	tempered safety glass	laminated safety glass
permissible bending stress	50 N/mm^2	15 N/mm^2
bending strength	120 N/mm^2	45 N/mm^2
temperature stability	250° max.	60° max.
thermal gradient	150 K max.	40 K max.

The EN requirement for an optimal physical protection is fulfilled at its best with tempered safety glass.

Pressure Relieve

Fume cupboards should be equipped with a pressure relieving system so that they can endure the excess pressure resulting from an explosion. This pressure relieving system should be arranged on the fume cupboard in such a way that it does not endanger the laboratory personnel.

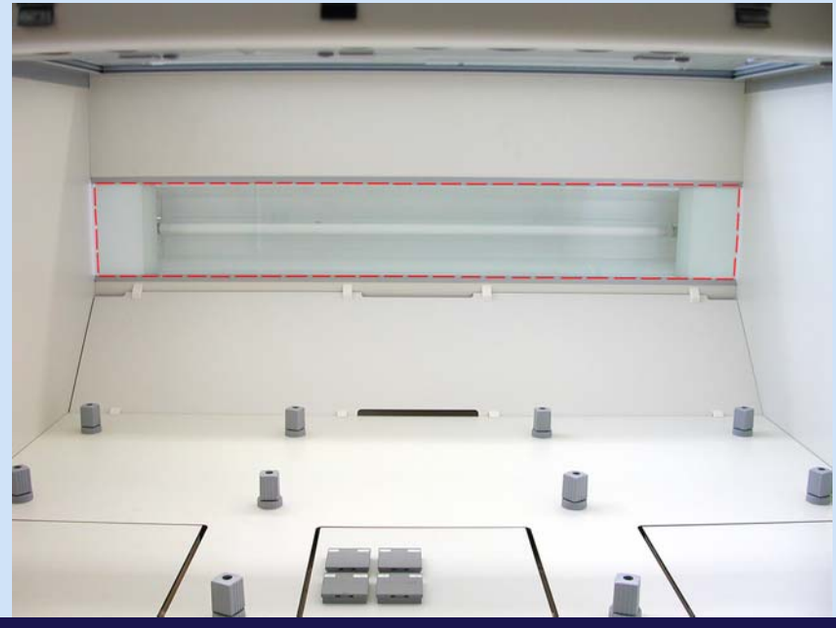

pressure relieve via the light pane – view from below

Maintenance Opening

The entire mechanical and electrical equipment of the fume cupboard should be accessible via a secure and suitable opening.

detachable front panel

Variable Sash Opening

The variable sash opening should be changeable in sash moving direction.
The largest sash opening should preferably be 500 mm in sash moving direction, but may not exceed 600 mm.

marking of
sash opening

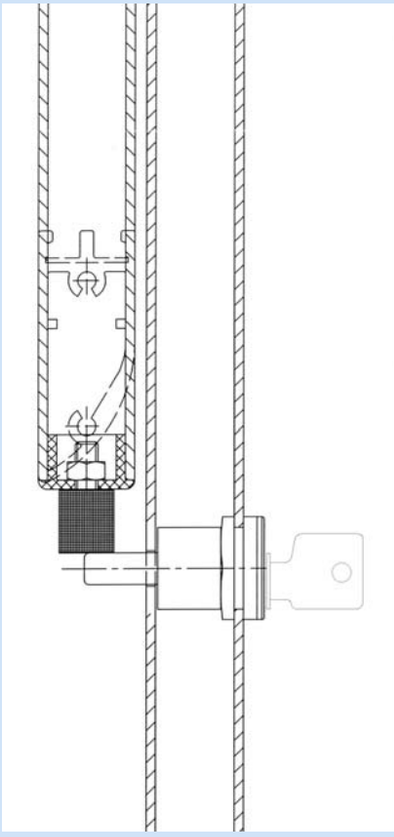

Sash Stopper

Vertical sashes require a stopper to avoid an opening of the sash beyond the largest sash opening position.
The user may not be able to repeal this stopper unintentionally.

sash stopper

Sash Alarm

An acoustic and a visual alarm should inform the user about an opening of the sash beyond its largest opening position.

display and acknowledgement of sash alarm

Sash Suspension

The vertical sash should be designed in such a way that it can not fall down in case of a failure of the suspension device. Closing and opening of the sash may not hold any risks of injuries. The sash should be stoppable in any position.

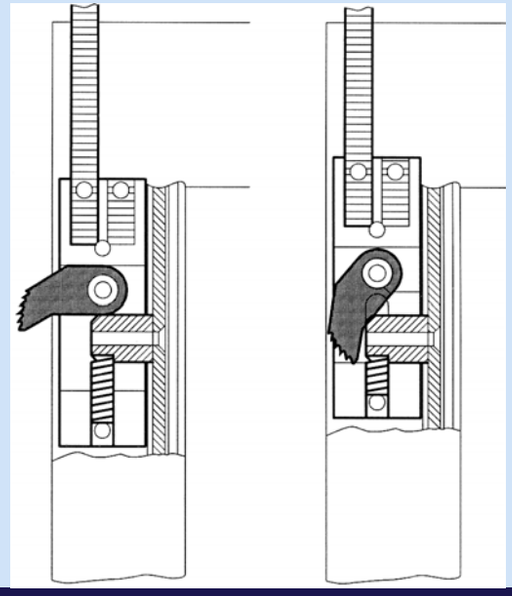

anti-skid device

Motor Driven Sash

The motor driven sash should be equipped with a detector which stops any movements as soon as an obstacle appears, which can even be transparent.

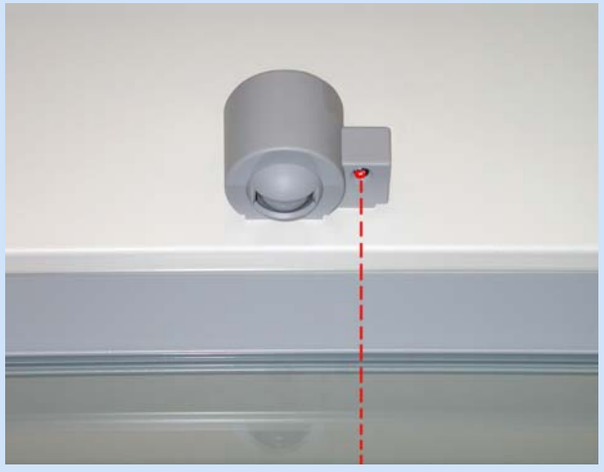

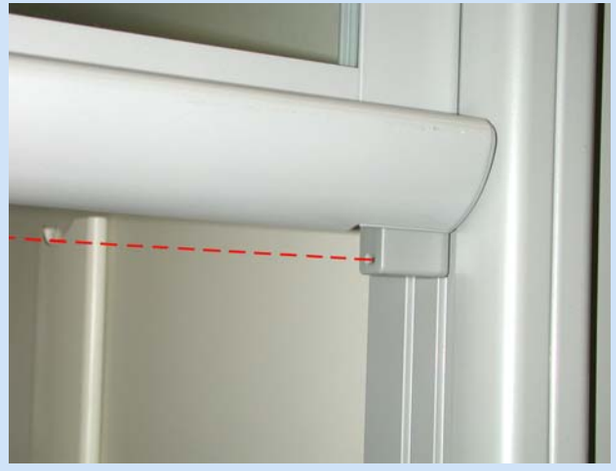

movement detector and photoelectric barrier

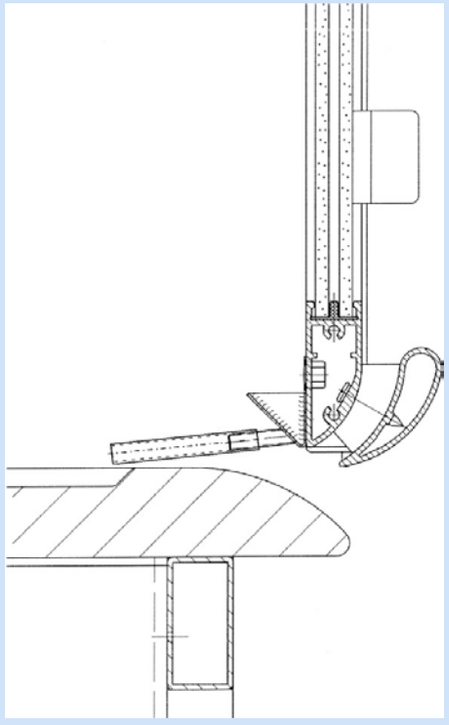

Splash Protection

The sash should be designed in such a way that risks due to splashes and fragments are minimized if the sash is in completely closed position.
Splashed liquids dripping from the sash may not escape the fume cupboard interior to reach the environment.

draining groove –
profile and view from the interior

Fume Cupboard Function Display

A fume cupboard function display should be installed to definitely indicate the correct functioning of the fume cupboard airflow. An additional possibility should be provided to easily check the correct functioning of the fume cupboard function display.

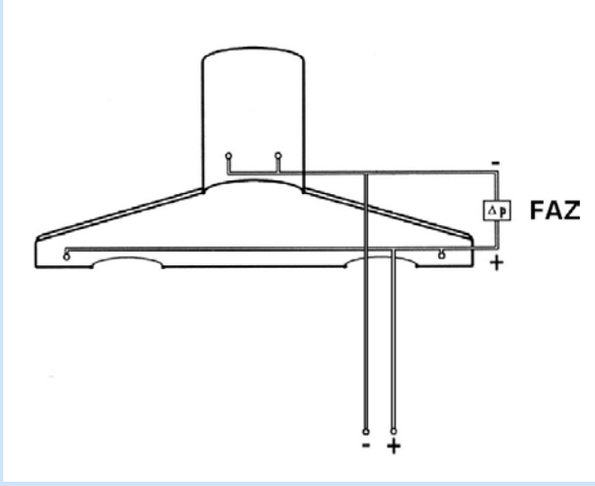

control station for an external pressure gauge

Fume Cupboard Function Display

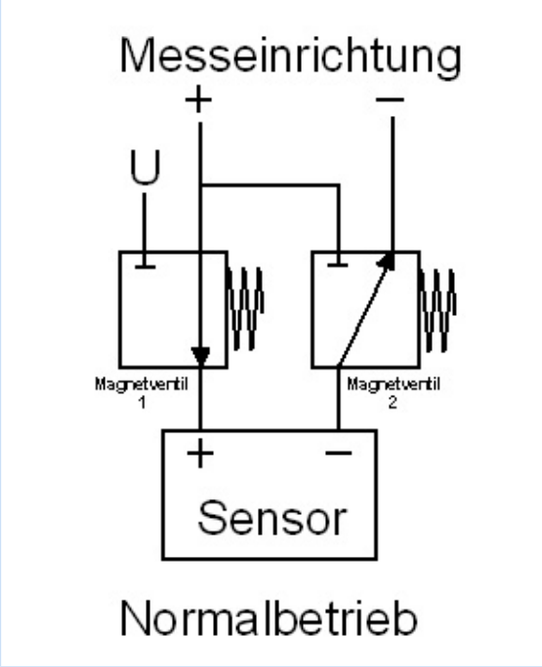

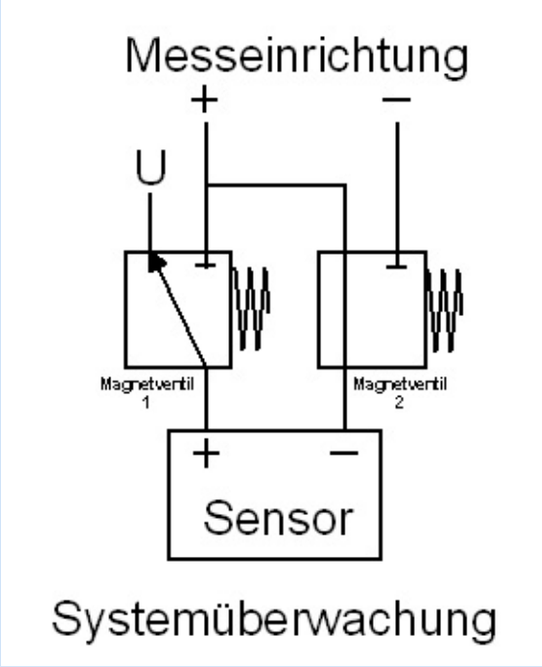

self-control through comparison measurement

Electrical Sockets

Wherever possible electrical sockets should be mounted on the fume cupboard exterior instead of the interior.

If an interior placement of electrical sockets is unavoidable they should be of a minimum protection system of IP 44. They furthermore should be switchable from the outside and therefore clearly be allocated.

electrical sockets
in the interior and on the exterior of the fume cupboard

EN 14175 Part 3

It is the aim of part 3 of the EN 14175 standard to stipulate type tests for the evaluation of safety and efficiency of fume cupboards.

Test Room

Contrary to the DIN 12924 standard in which the area of the test room (15 bis 20 m^2) is limited to top and bottom, only the minimum dimensions (L=4.0 m x W=4.0 m x H=2.7 m) are given in the EN 14175 standard.

A further difference is the information about a minimum air exchange rate in the DIN standard, whereas the EN standard does not mention any values, plus the information about the test room and supply air temperature (23 ± 3 °C) in the EN standard, which are not mentioned in the DIN standard.

Test Room

Test Conditions

The test positions of horizontal and vertical sashes are given.

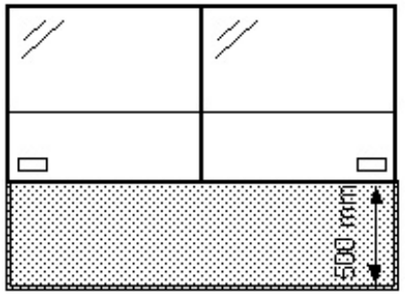

Pos. 1
vertikaler Frontschieber 500 mm geöffnet,
horizontale Frontschieber geschlossen

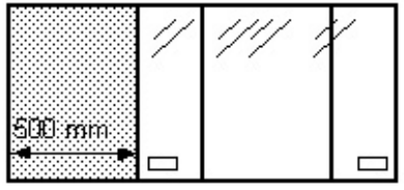

Pos. 2
linker horizontaler Frontschieber 500 mm geöffnet,
vertikaler Frontschieber geschlossen

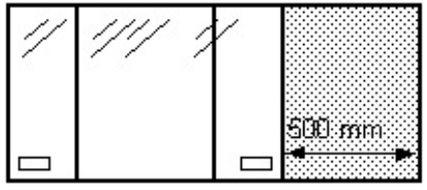

Pos. 3
rechter horizontaler Frontschieber 500 mm geöffnet,
vertikaler Frontschieber geschlossen

test openings of sash

Face Velocity Test

An anemometer sensor should be positioned on the intersections of lines given on the interior measuring plane.

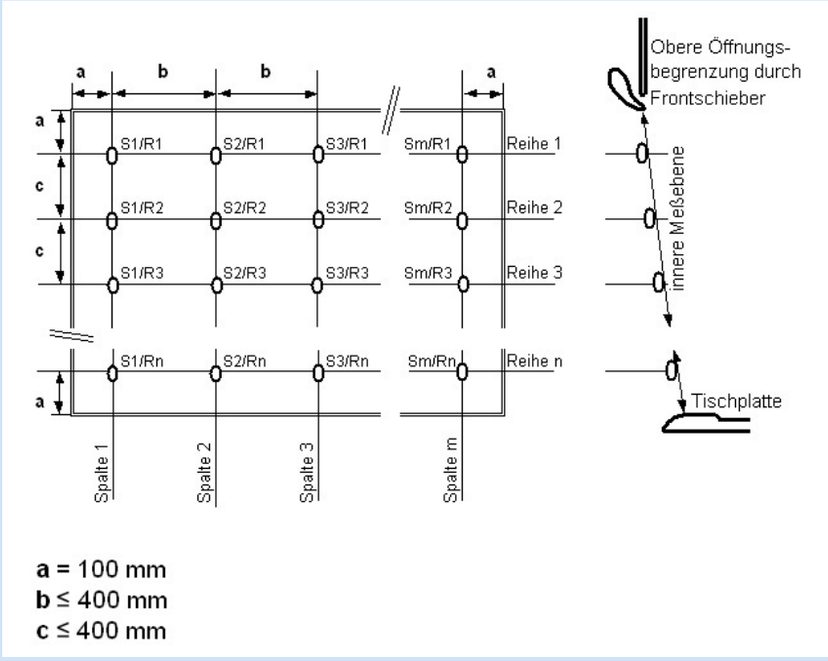

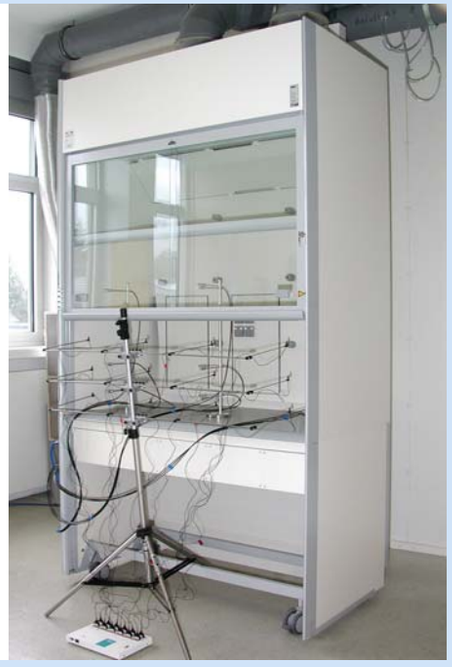

sensor positions

Face Velocity Test Results

For each measuring point the mean velocity in m/s and the standard deviation is calculated and scheduled.

From these values the mean velocity in test sash opening is calculated.

Containment Test

The test equipment is described in detail.
All instruments should have a valid calibration.

According to DIN 12924 a mixture of sulphur hexafluorid (SF_6) and nitrogen (N_2) with a percentage of (10 ± 1)% (volume percent) is used as test gas.

In the fume cupboard nine test gas outlets are placed on one plane with a distance of 200 mm from the sash and grid produced through a defined intersection of lines.

Containment Test

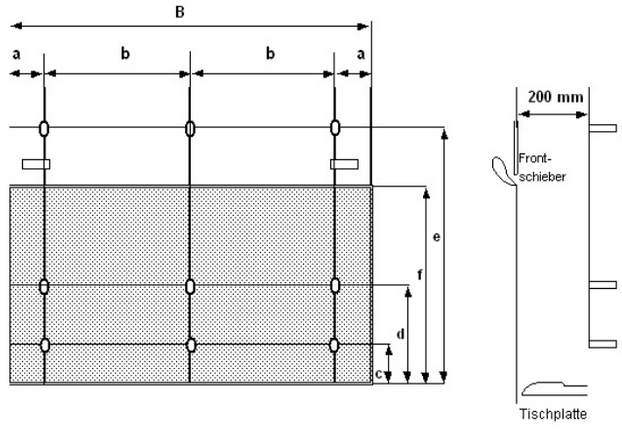

= Umriss der geöffneten Fläche

a = 100 mm
B = Lichte Breite des Abzugs
b = (B - 2a) / 2
c = 100 mm
d = 250 mm
e = 650 mm
f = 500 mm

test gas outlets

Samplers

Nine samplers each should be located on one interior and one exterior measuring plane in a grid produced of intersections of lines as shown in the illustration below.

Samplers

Interior measuring plane:

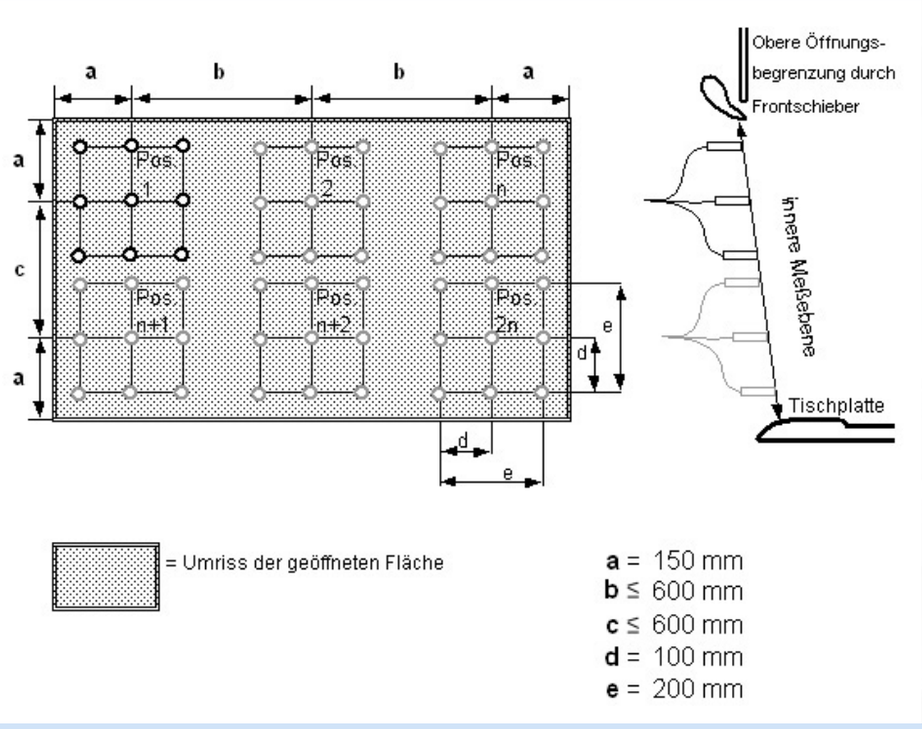

sampler on interior measuring plane

Samplers

Interior measuring plane:
The test procedure for the interior measuring plane can be compared with a static measurement as per DIN 12924. For the various test sash openings the SF_6 concentration is measured and recorded for 360 s.

The containment factor CF_i is determined,

$$CF_i = q / (Q \times C_{imean})$$

in which q is the airflow rate of SF_6, Q the airflow rate of the fume cupboard and C_{imean} mean SF_6 concentration.

Samplers

Exterior measuring plane:

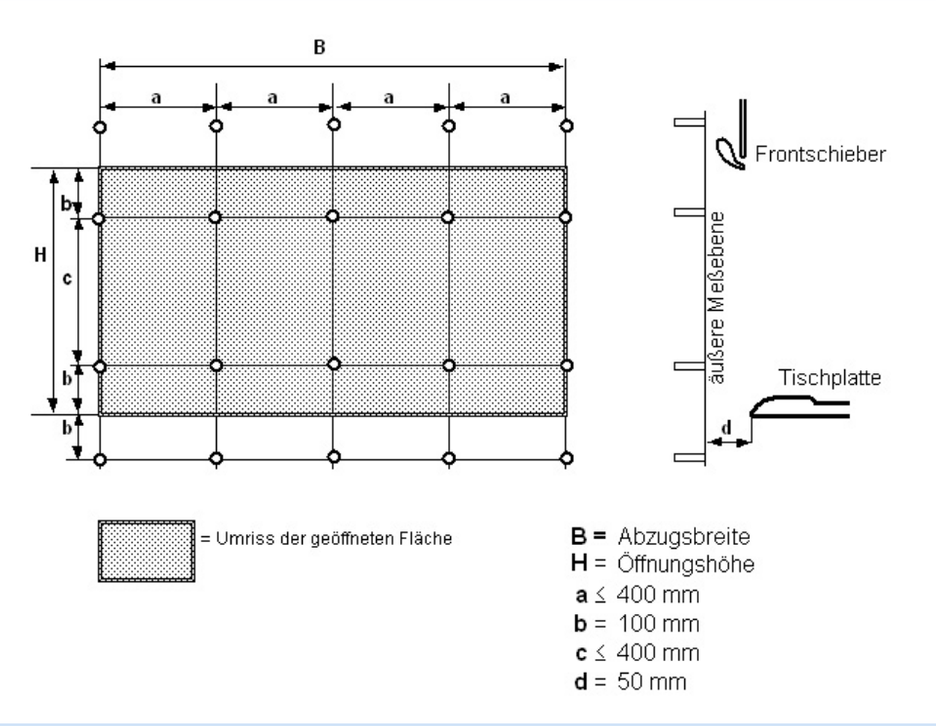

sampler on exterior measuring plane

Samplers

Exterior measuring plane:
The test procedure for the exterior measuring plane can be compared with a dynamic measurement as per DIN 12924. The SF_6 concentration is measured and recorded for 780 s.

The test starts with the sash being in an (opened) test sash position.

After 360 s the sash is closed within (1 ± 0.2) s and after a further 360 s opened again within (1 ± 0.2) s.

Samplers

Exterior measuring plane:

For each test position resulting from this test procedure the respective containment factor ***CF*** is determined.

$CF_o = q / (Q \times C_{omean})$

C_{omean} = mean SF_6 concentration for a testing period from 60 s to 360 s

$CF_{dc} = q / (Q \times C_{dcmean})$

C_{dcmean} = mean SF_6 concentration for a testing period from 361 s to 420 s

$CF_c = q / (Q \times C_{cmean})$

C_{cmean} = mean SF_6 concentration for a testing period from 421 s to 720 s

$CF_{do} = q / (Q \times C_{domean})$

C_{domean} = mean SF_6 concentration for a testing period from 721 s to 780 s

Containment Robustness

For the containment robustness test, which does not exist in the DIN 12924 standard, a flat rectangular board with a height of (1.90 ± 0.01) m, with a width of (0.40 ± 0.01) m and with a thickness of (20 ± 5) mm should be additionally installed in front of the fume cupboard.

This board should be moved across the fume cupboard front with a speed of (1.0 ± 0.1) m/s during the containment test.

The board should be installed 200 mm above the floor and 400 mm from the part farthest away from the interior measuring plane grid.

Containment Robustness

test set-up for containment robustness

Containment Robustness

To carry out this test the sash is set to test sash opening position. The board is moved forward and backward across the fume cupboard front. The path of movement should project the fume cupboard width for 600 mm on each side. The time between each crossing should be 30 s.

The test gas concentration is measured and recorded. After a period of 60 s the movements of the board across the fume cupboard front are started and six complete crossings are carried out. The measuring signal of the gas analyzer is being recorded for a further 30 s.

Containment Robustness

The robustness of the containment factor $\boldsymbol{CF_r}$ is determined.

$$\boldsymbol{CF_r} = q / (Q \times C_{rmean})$$

C_{rmean} = mean SF_6 concentration
for a testing period from 60 s to 240 s

Test of Air Exchange Capacity

The outlet grid is set up in the fume cupboard in the same way as for the containment test. Centrally to the pipe profile a sampler is located within a straight piece of the exhaust air pipe.

The sampler outlet of the gaz analyzer is connected to the fume cupboard exhaust air pipe below the sampling point.

sampler in exhaust air pipe

Test of Air Exchange Capacity

To carry out this test the fume cupboard sash is set to the smallest sash opening and the airflow rate of the test gas is adjusted so that the SF_6 concentration on the connection point of the exhaust air device is between 5 ppm and 8 ppm in stationary state.

The SF_6 concentration is measured and recorded. After 200 s the test gas is turned off. The concentration should now fall. The measurement and the recording of the concentration is continued for a further 200 s.

Test of Air Exchange Capacity

air exchange capability $H = \frac{V_{fc} \times n}{Q} \times 100$

n = air exchange rate per hour = (calculated according to EN ISO 12569)

n = (ln 1 – ln 2.71) / ΔT = (0 - - 1) / 22 s

Q = exhaust airflow rate = 700 m^3/h

V_{fc} = interior fume cupboard volume = 1m52 m^3

$$H = \frac{V_{fc} \times n}{Q} \times 100 = \frac{1.52\ m^3 \times 3600 s/h}{700\ m^3/h \times 22\ s} \times 100 = 35.5\%\ \text{at V} = 700\ m^3/h$$

Test of Pressure Loss

At least four pressure measuring points should be located on the exhaust air device connection point. They should be equally distributed around the perimeter of the connection pipe. All pressure measuring points should be connected to a joint outlet for a measurement of the mean pressure value.

pressure measuring points
on the connection point

Test of Pressure Loss

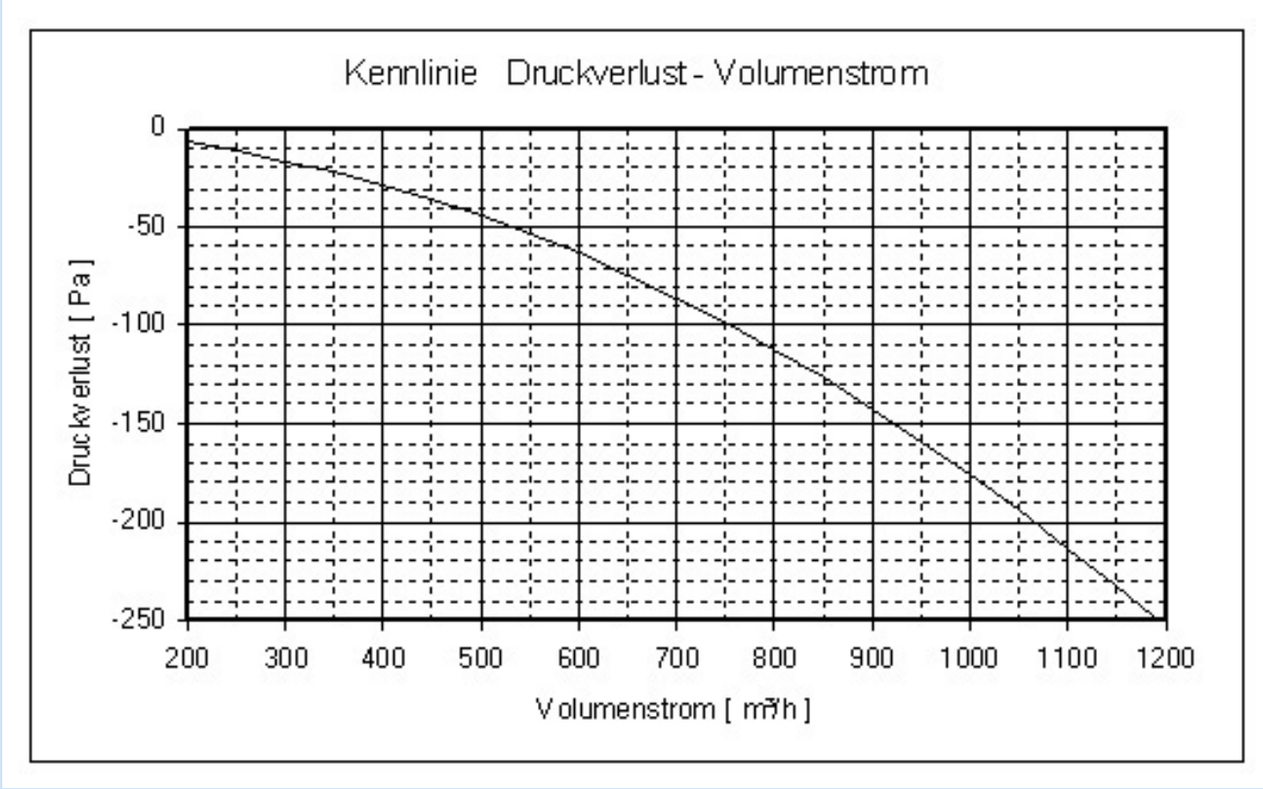

pressure loss through exhaust airflow

Requirements for the Aerodynamics of Fume Cupboards

Upright Pillars

The influence of the geometry of the fume cupboard upright pillar is particularly shown when testing the containment robustness, which represents a reproducable disturbance from the air flowing into the fume cupboard from the room.

Burbles run the risk of a backflow of contaminants from the fume cupboard interior to the front opening.

Requirements for the Aerodynamics of Fume Cupboards

Upright Pillars

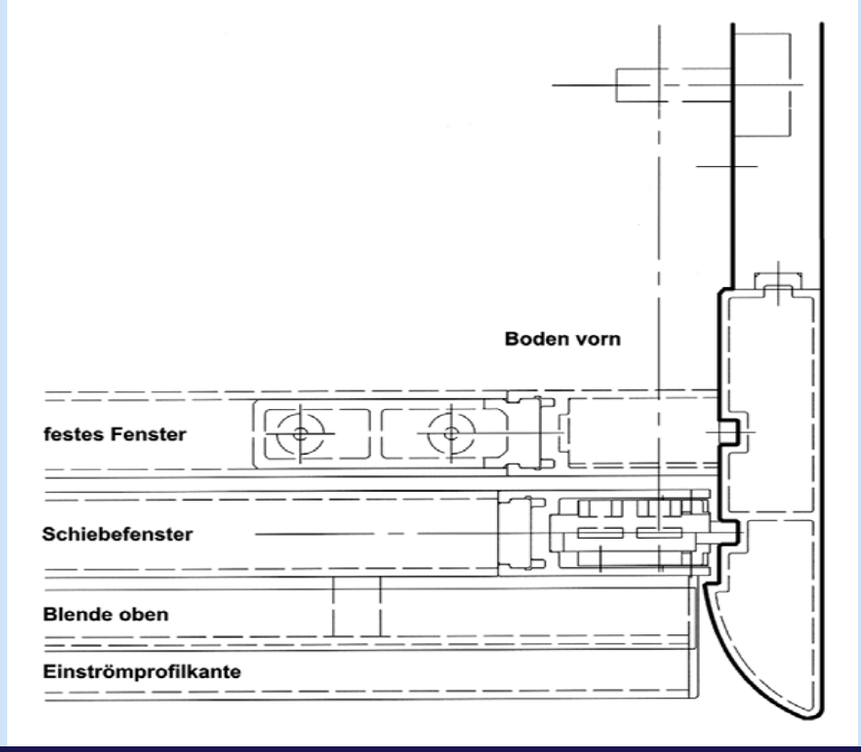

profile through upright pillar

Requirements for the Aerodynamics of Fume Cupboards

Upright Pillar

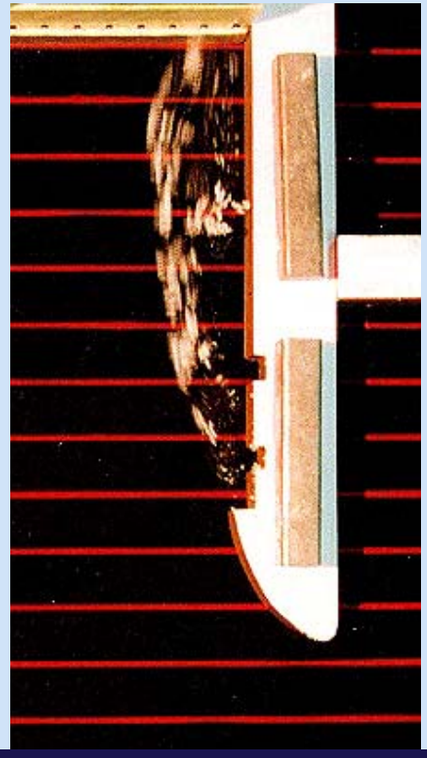

simulation of current upright pillar linkage in shallow water duct

Requirements for the Aerodynamics of Fume Cupboards

Upright Pillars

flow visualization with smoke

WALDNER Laboreinrichtungen GmbH & Co. KG
Wangen im Allgau

Worktop

Analogous to the upright pillars there is also a risk of burbles on the front edge of the fume cupboard worktop, which can result in a backflow of contaminants from the fume cupboard interior to the fume cupboard opening.

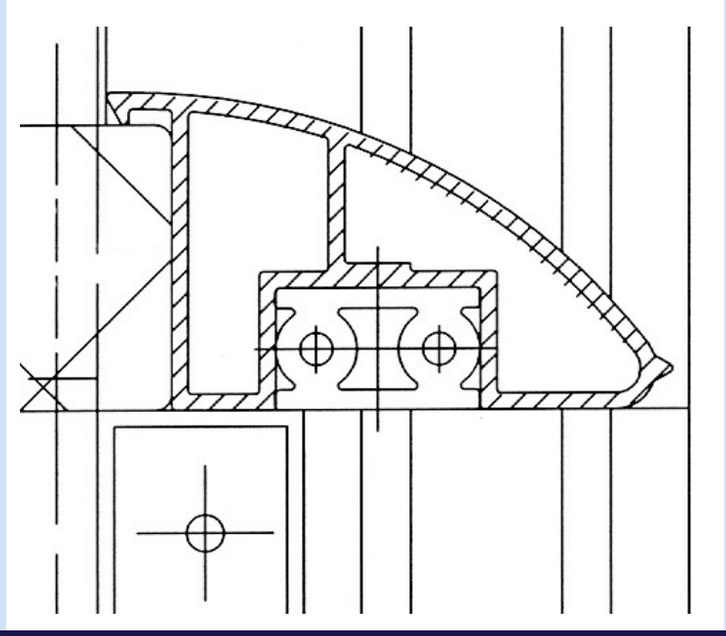

profile through the worktop air foil cill

Worktop

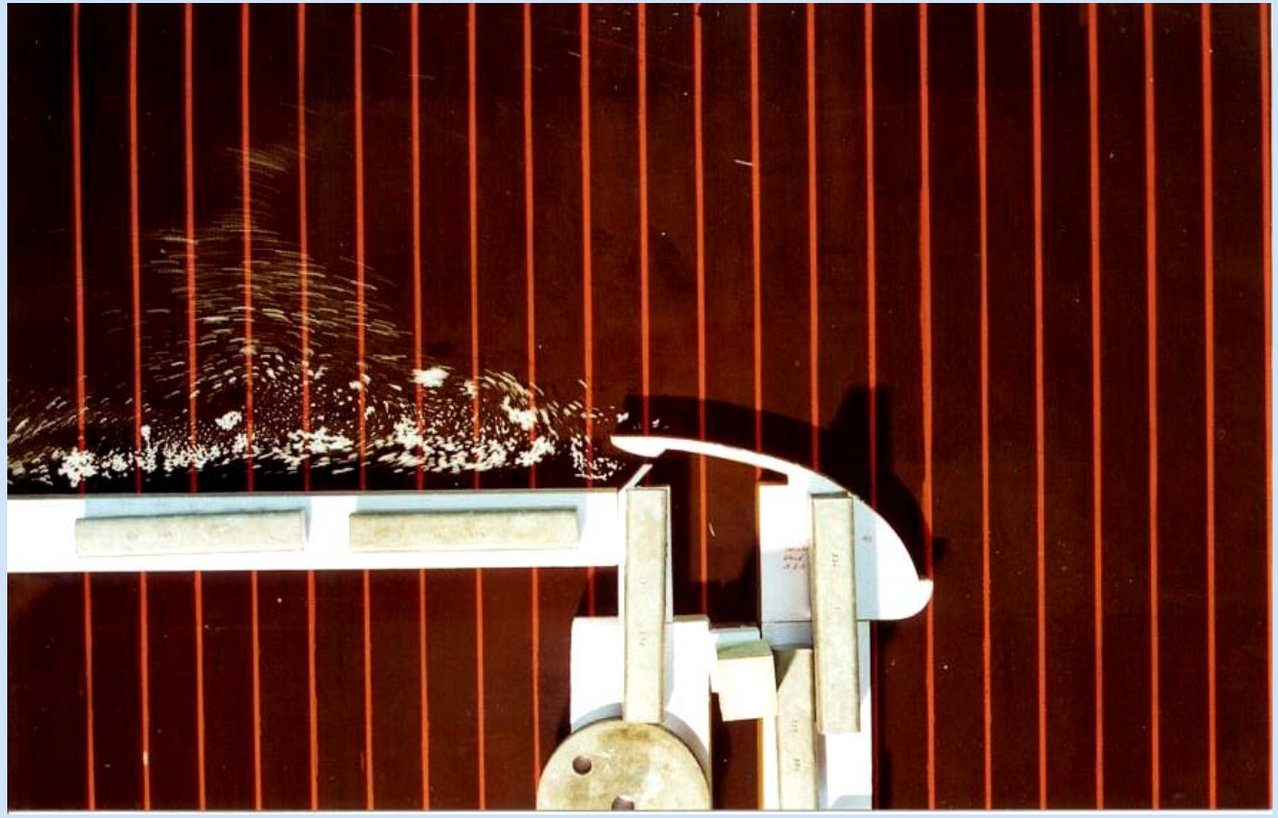

simulation of current worktop linkage in shallow water duct

Worktop

flow visualization with smoke

Sash Handle

The movement speed of the sash interferes with the face velocity of the room air, resulting in a flow depending on its direction from the (variegating) ratio of these two basic velocities.

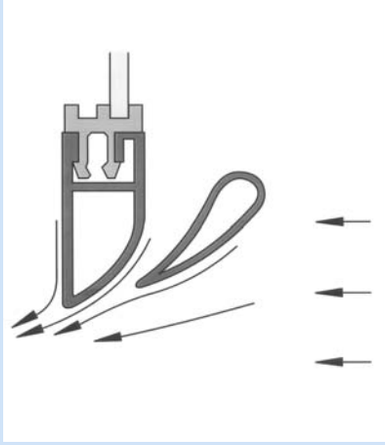

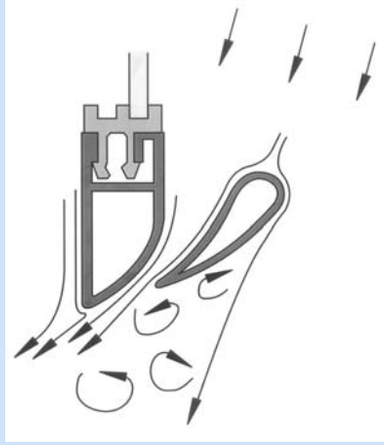

intake flow of sash handle – static and dynamic – upward sash movement

Sash Handle

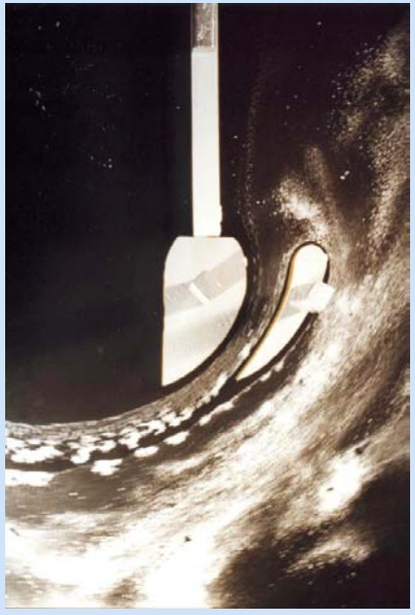

simulation of flow in shallow water duct /
flow visualization with smoke

Sash Handle

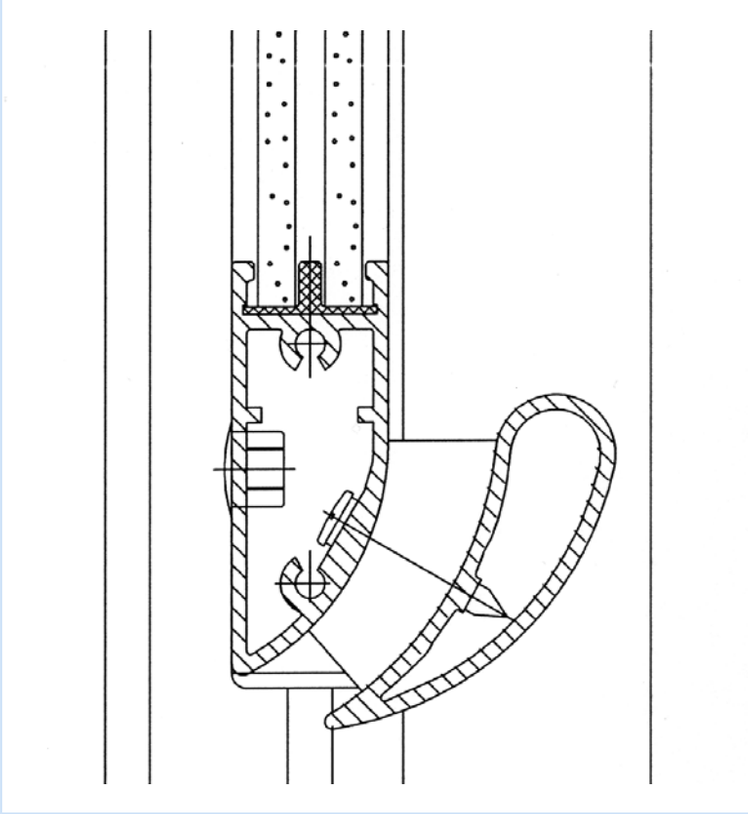

sash handle profile

Distribution of Extraction and Pressure Loss

If the exhaust air volume is increased also the pressure loss correction values are changed and the centre of the extraction distribution is moved to the connection of the extraction device.

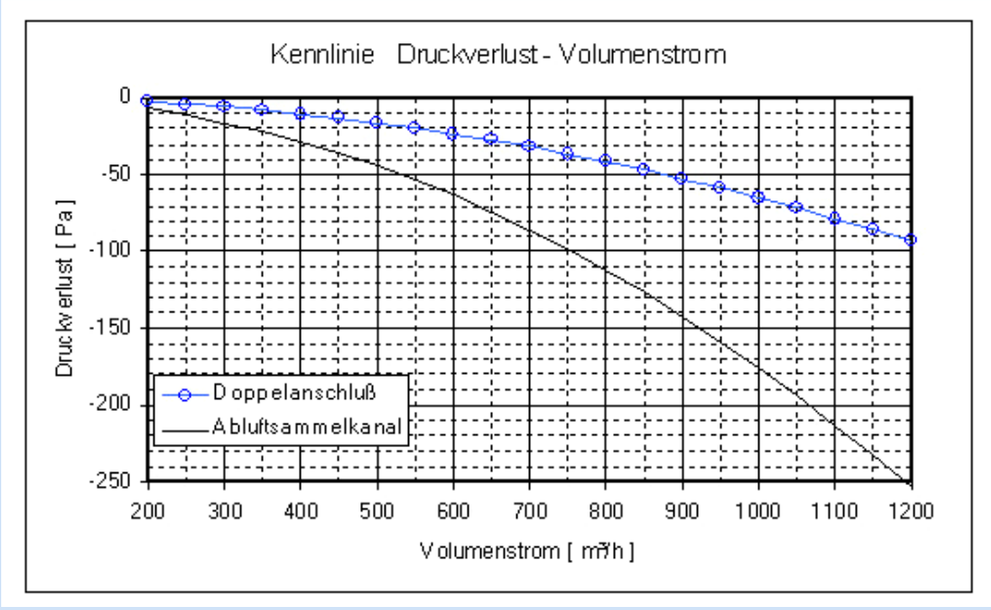

characteristic pressure loss curve

Supportive Flow Technology

The development of the supportive flow technology was aimed to achieve a further aerodynamical optimization, particularly with regard to stability of the fume cupboard against disturbances from the room such as diagonal flow, which in practice is caused by open laboratory doors or by people passing the fume cupboard.

Supportive Flow Technology

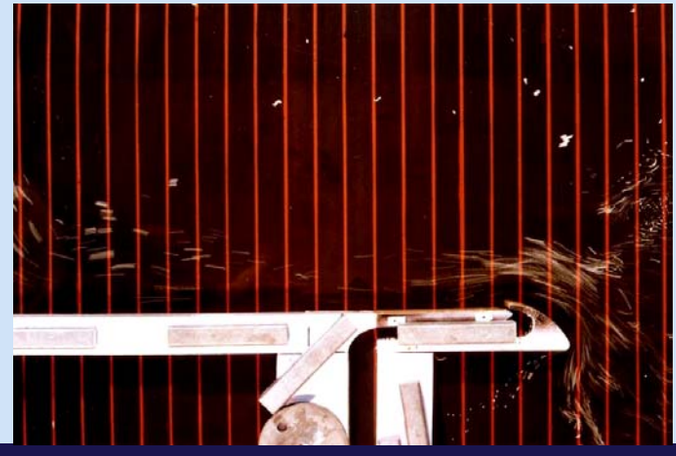

simulation of current pillar linkage in shallow water duct – with and without supportive flow

Supportive Flow Technology

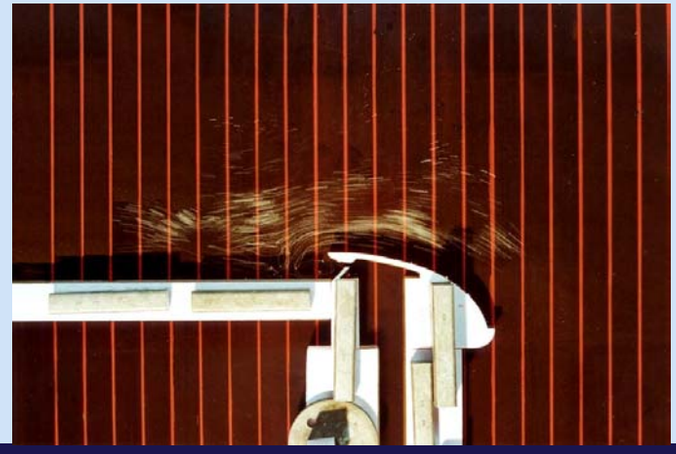

simulation of worktop air introduction in shallow water duct – with and without supportive flow

Supportive Flow Technology

visualization of current pillar linkage with smoke – with and without supportive flow

Supportive Flow Technology

visualization of worktop air introduction with smoke – with and without supportive flow

Comparison Measurements

The tests carried out according to part 3 of the EN 14175 standard show that both, the aerodynamic quality of the tested fume cupboard and the airflow rates taken as a basis, considerably effect the results.

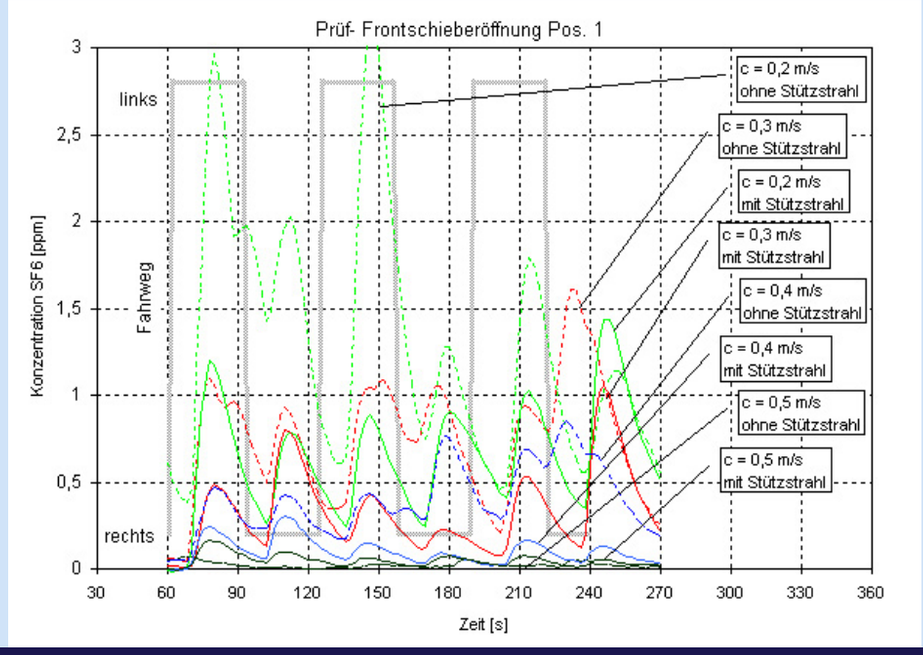

comparison measurement of containment robustness

Summary

The requirements of the European Standard EN 14175 are clearly more distinctive than the ones of the DIN 12924 standard.

This applies for the design and for the aerodynamics.

Especially the absolutely new containment robustness test allows for conclusions with regard to the efficiency of a fume cupboard under practical conditions, whereas the dynamic test as per DIN 12924 facilitated this only partially.

Summary

In contrast to the above is the missing limit values in the EN 14175 standard.

Now the licencing authorities are challenged on a national level. As soon as the test results of the various testing institutes and fume cupboard systems are available, limit values should be defined.

At that point the new European fume cupboard standard will contribute to make fume cupboards even safer and more efficient in future.

Thank you very much for listening.